SF-RA P140

x2 FRENO RETENEDOR

saheco
sistemas para puertas correderas

Poligono Industrial Foradada - 08580 - Sant Quirze de Besora (Barcelona)
Telf. 34-93.852.92.23
Export. Telf. 34-93.852.96.15
e-mail: saheco@saheco.com - web: www.saheco.com

MADE IN E.U.

GRUPO TORREMAT

MAX. 140 kg

8 422204 843726

MAY 2023

038060785

CODE: 0 140 04

a		2
b		1
c	DIN 7505 A 4x20	4

h		2
j	DIN 7505 B 5X30	4
k	DIN 7505 A 5x30	4
n		2
v		2

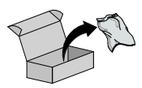

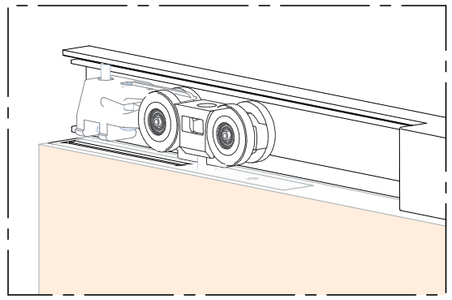

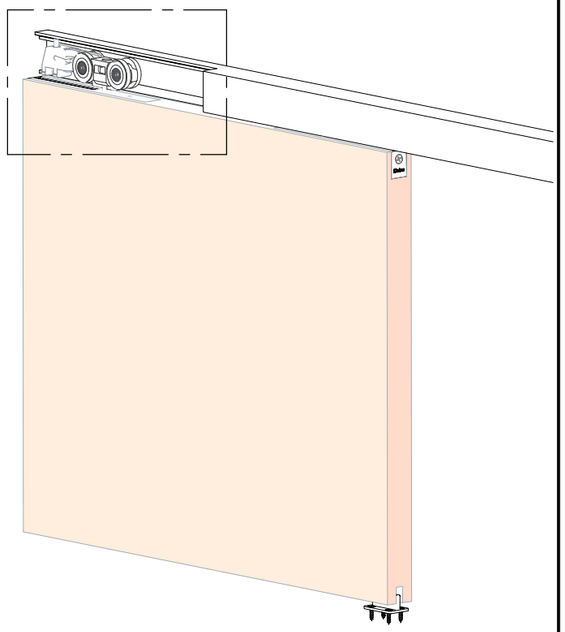

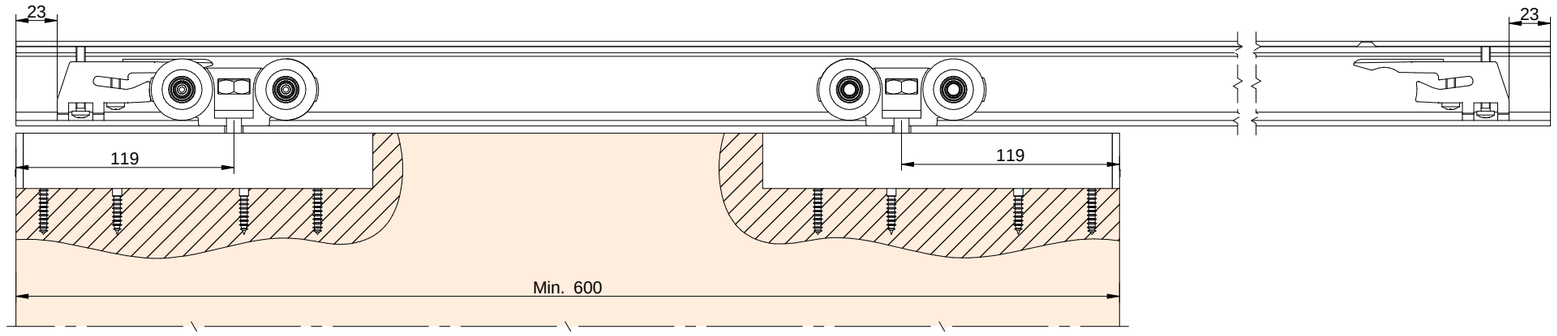

PERFIL SUPERIOR STAR XL / Star XL top track

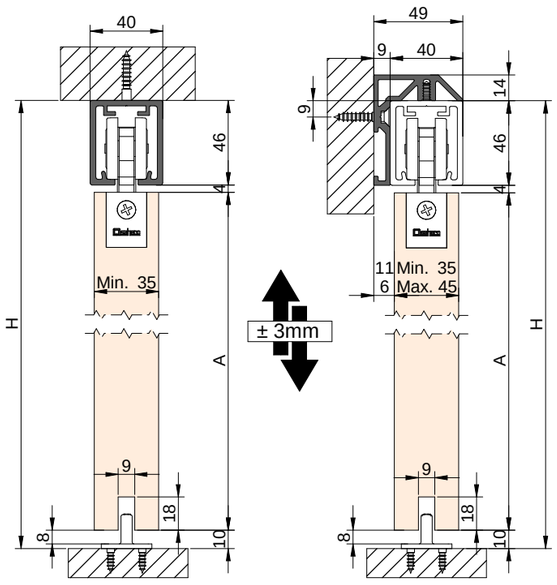

A= H-60

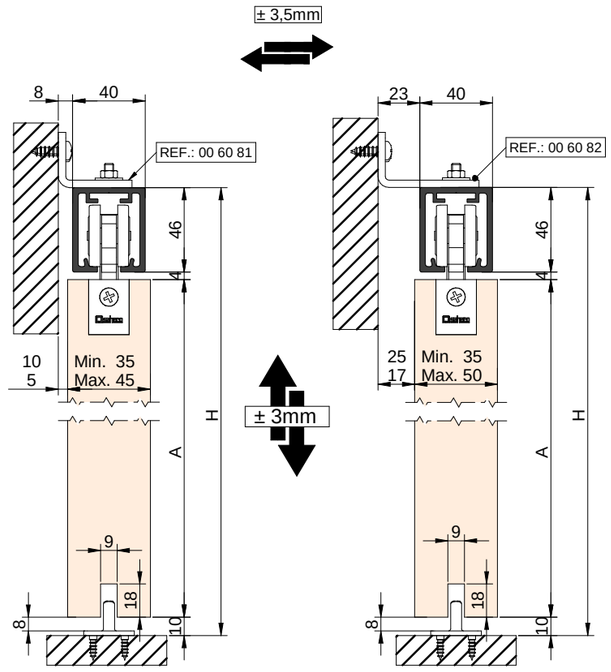

A= H-60

PERFIL STAR FALSO TECHO / Profile Star for plasterboard

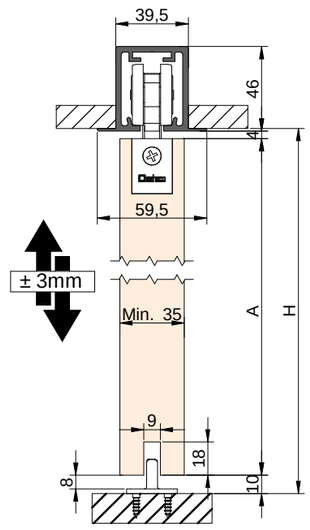

A= H-14

PERFIL FUNDA FT XL / Support FT XL track
FALSO TECHO / False ceiling

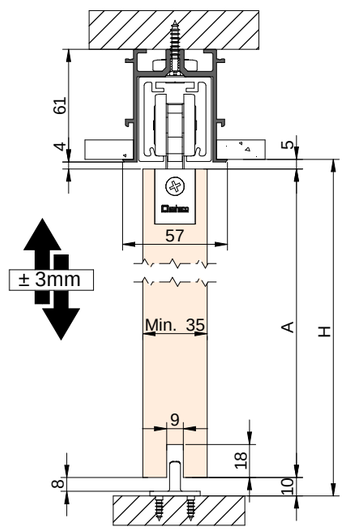

A= H-14

PERFIL STAR FTI FALSO TECHO / Profile Star FTI for plasterboard

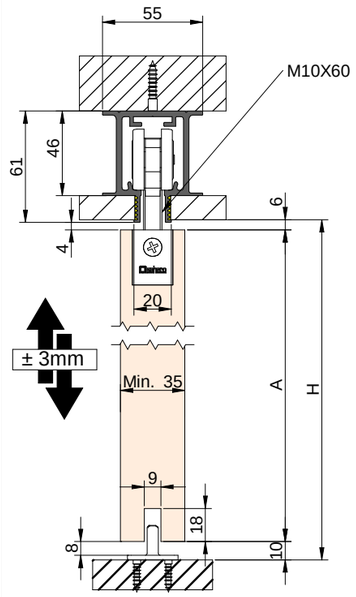

A= H-16

A3H

1 MONTAJE A TECHO / Ceiling mount

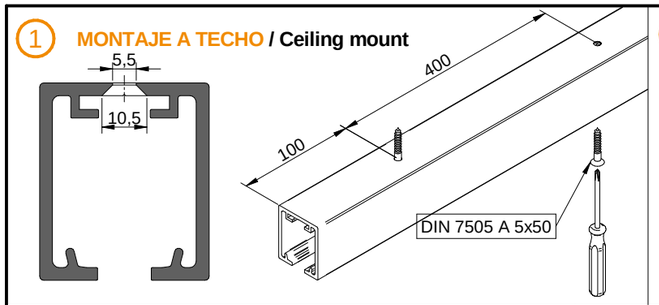

2 MONTAJE A PARED + PERFIL SEPARADOR / Wall mount + full width side fixing profile

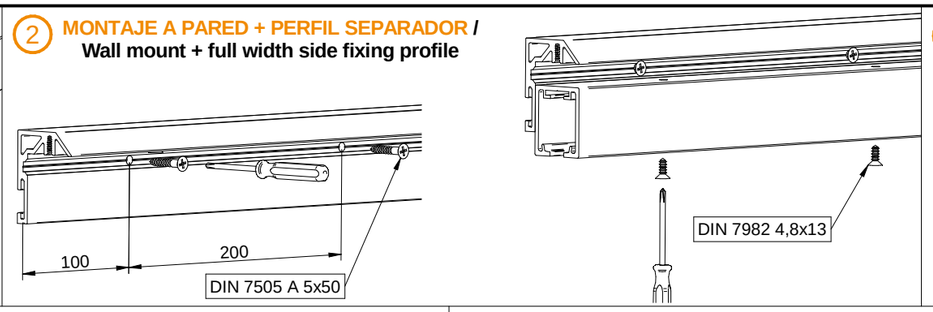

3 MONTAJE A PARED / Wall mount

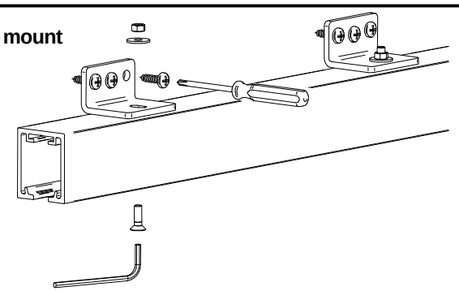

4 MONTAJE COMPONENTES/ Assembly components

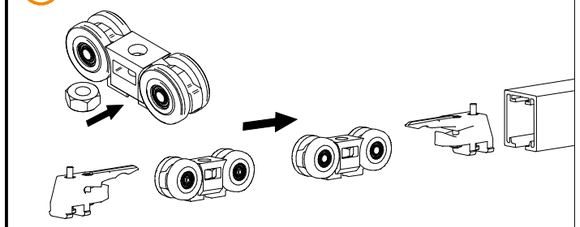

5

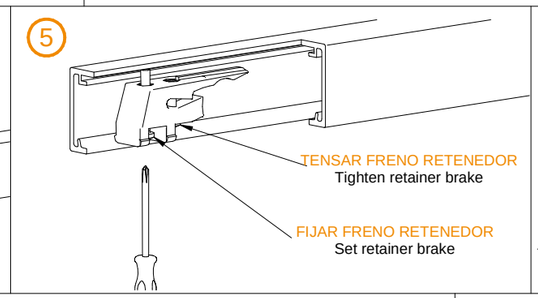

6

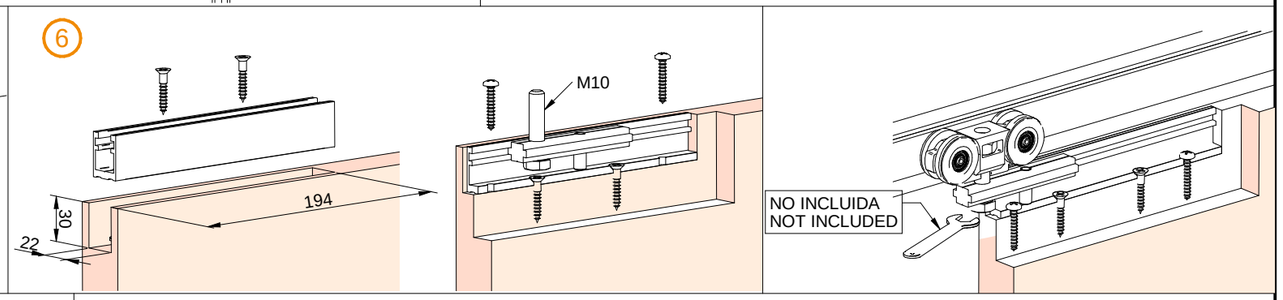

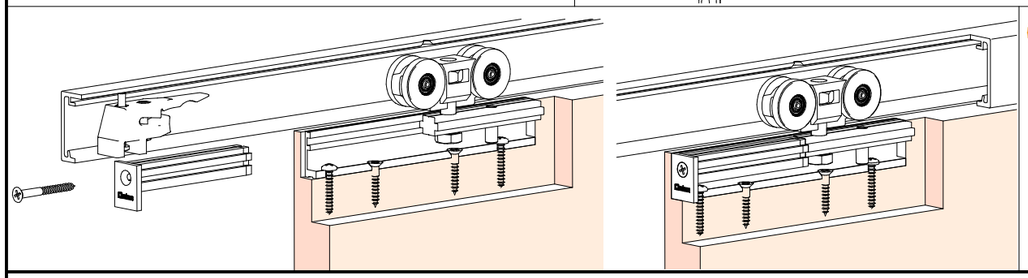

7

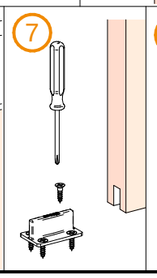

8

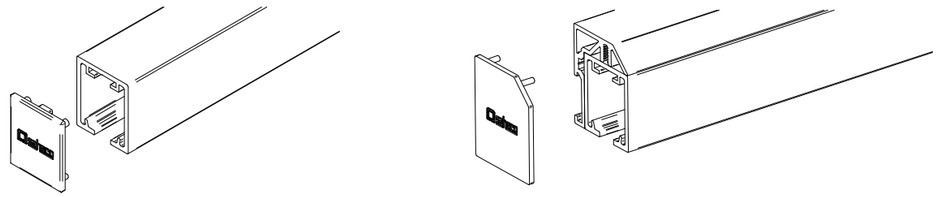

MONTAJE PERFIL FUNDA XL / AssemblySupport FT XL track

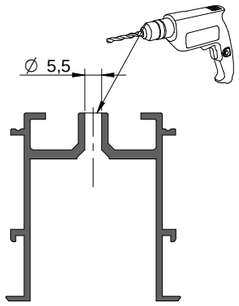

FALSO TECHO / False ceiling

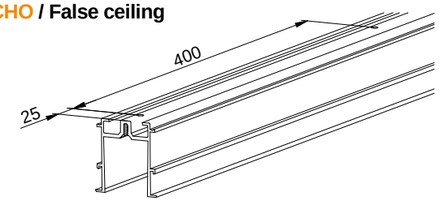

LARGO / Long	Nº TALADROS / Drills
2m	6 (Ø 5,5mm)
3m	9 (Ø 5,5mm)
4m	11 (Ø 5,5mm)
6m	16 (Ø 5,5mm)

9

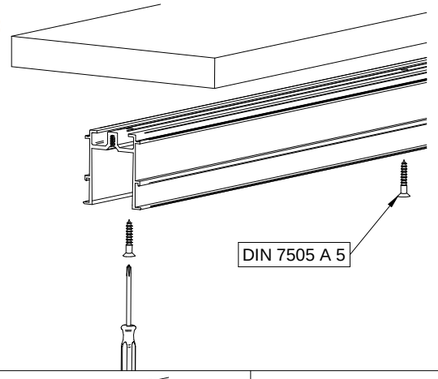

10 PERFIL SUPERIOR STAR XL / Star XL top track

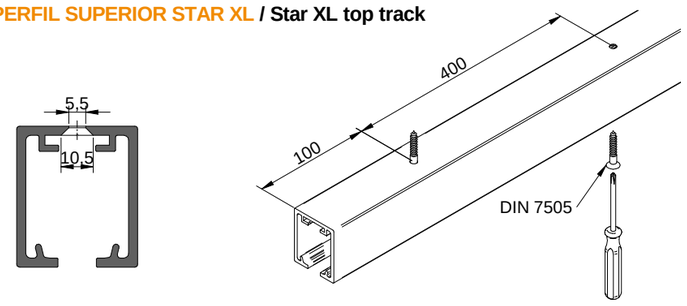

11

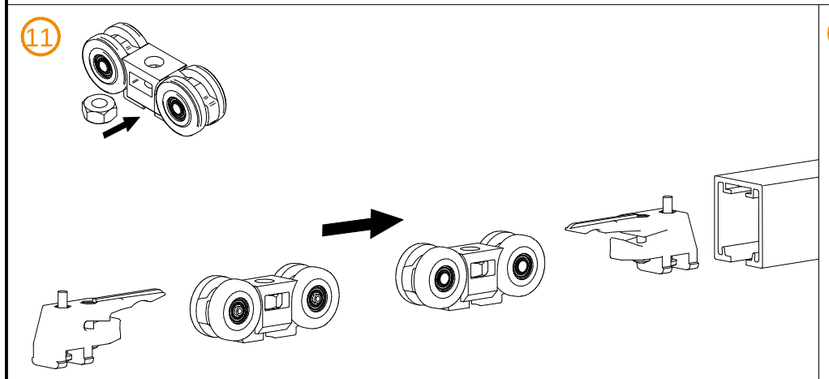

12

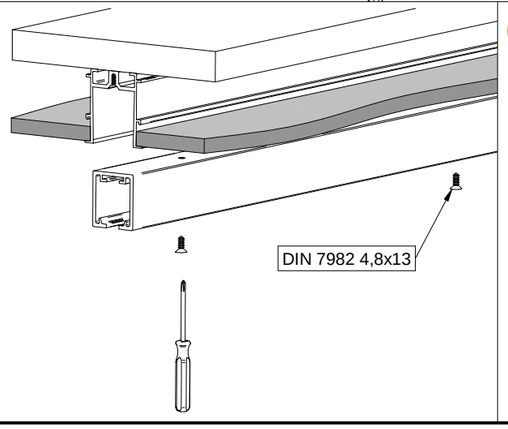

13

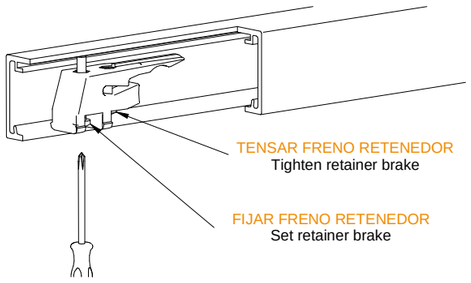

14

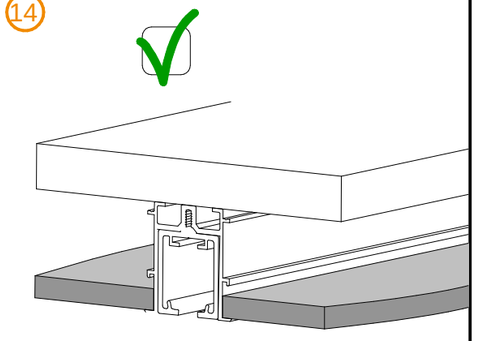

A3H